ISSN 2395-1621

Design and Analysis Overload Torque Limiter with Electro-mechanical Clutch for Timer Belt Spindle Drive

#1Chaitanya G. Burande,#2 Prof. S. V. Patil

1burandechaitanya5@gmail.com
2sanjaysingh.patil@sinhgad.edu

#1PG student, Mechanical Design Engineering, RMD sinhgad school of engineering, Warje
#2Associate professor, Department of Mechanical Engineering RMD sinhgad school of engineering,
Pune,India

ABSTRACT

Positive clutches used to transmit power between coincident shafts. The positive Engagement between clutch element ensure 100% torque transmission but occasionally the output shaft may be subjected to sudden overload which May make driving motor or engine to stall, which will lead to burn out electric Motor. In extreme cases this overload will lead to breakage of drive elements or clutch itself. In order to avoid this damage, it is needed that the input and output shafts be disconnected in case of sudden overload. Torque limiter is overload safety devices which provide the reliable overload protection. Torque limiter is tamper proof. Generally whenever overload occurs in any shaft drive mechanism there is failure of following components possible-
1) Shaft / Coupling / Belt Drive
2) Machine shaft
3) Motor (Burning of electrical motor) Due to Overloading

In any case this damage leads to Replacements of machine parts and Ultimately replacement cost increases. To overcome all this problem available in machine element, Torque limiter will help us to avoid this damage.

Keywords— **Torque limiter, Eletro-mechanical Clutch, Timer belt spindle drive.**

ARTICLE INFO

Article History

Received :18th November 2015

Received in revised form :

19th November 2015

Accepted : 21st November , 2015

Published online :

22nd November 2015

I. INTRODUCTION

Safety ball clutch are Overload Safety Devices with Torque Limiters which provide reliable overload protection. When a jam-up or excessive loading occurs the Safety ball clutch will reliably and quickly release to prevent system damage.

- These torque limiters are tamper-proof. Once installed, the torque value cannot be changed. This is an important feature that ensures the integrity of the machine design. Costly and potentially risky calibration procedures are not necessary. The torque value is controlled by the part number that is ordered. That value determines what spring is used during the assembly at the factory.
- The torque value can be changed in the field, however; the Safety ball clutch must be disassembled and the springs replaced to achieve the new torque value.
- Standard Safety ball clutch are bidirectional. The torque value is the same regardless of rotation. If specified, these torque limiters can be configured at

the factory to release at different torque ratings for different rotational directions.

- In the coupling configuration, the Safety ball clutch fulfills two functions:

  (1) A flexible shaft coupling

  (2) a mechanical torque limiter.

  The Safety ball clutch in the shaft to shaft configuration will handle angular shaft misalignment up to 1.5 degrees and 0.005 degrees to 0.015 degrees maximum parallel misalignment.

- The enclosed design of the mechanical Safety ball clutch enables it to operate in a wide variety of industrial environments. Special designs and materials can be made to withstand even more adverse conditions.

The torque value is determined by the force of the springs that are installed in the unit. The spring force acts upon the slides that are part of the inner shaft. These slides transmit force that will hold the drive key into an engagement slot in the outer housing. When the torque load exceeds the rating, (determined by precision tempered torque springs) the Safety ball clutches drive key will pivot out of the engagement slot to disengage the Safety ball clutch. After disengagement the Safety ball clutch does not have significant resistance to rotation. Upon completion of one shaft rotation the Safety ball clutch will automatically try to reengage. Once the overload is removed and speed reduced, the drive key will snap into the engagement slot and the Safety ball clutch will be reset for the next overload event .This particular design is suitable for a single set of the design torque, and is not suitable for applications where the set torque may vary as per application. Rarely occurring overloads must be considered during the design process of a power train. These overloads can be evoked by malfunctions in the electronics of inverter and installation control, by obstructions in the work flow, by mis-operation etc. These overloads may create pre-damages which lead to full failure of the assembly or its components. Such affecting loads are avoidable by means of overload clutches. Thus reliable overload clutches are of strongly increasing interest for years.

A. *Disadvantages of current system of overload protection*

To protect the drive from failure, what is available in market is a Flying ball clutch. which transmits torque from input to output using balls held by a spring in assembly when overload occurs the balls will come out of assembly – thus disconnecting input and output thereby saving part failure But

- Rating of clutch is 1N-m, 5 N-m, 20 N-m etc. i.e. fixed value so if o/p torque change we have to replace clutch.
- Every time ball comes out of assembly we have to remove the clutch to replace ball this increases down time of machine
- Drive always remains coupled there is no flexible arrangement like automobile clutch i.e. possibility to disengage at will.
- If temporary overload occurs the clutch will slip and remain disengaged till it is preset even though the overload is now removed this leads to process down time.
- Thus there is a need of Timer belt spindle drive with overload Safety ball clutch with following features

B. *Advantages of overload torque limiter*

- Electromechanical dis-engagement so that drive can be temporarily disengaged for I in process inspection or other activity
- The Safety ball clutch can be set over a range of torques (say 0 to 20 kg-cm) so that the machine operator can set it to desired value for given application unlike the conventional clutches that are factory set.
- The transmission elements ie, the balls will not come out of assembly when there is overload slipping this comes as an advantage as the clutch can be preset without removing it from assembly this will save considerable amount of downtime of process as compared to the conventional clutch.
- If temporary overload occurs the clutch will slip and remain disengaged only till the overload is removed thus if the overload is removed while in running condition the clutch shall automatically engage and start transmitting power.

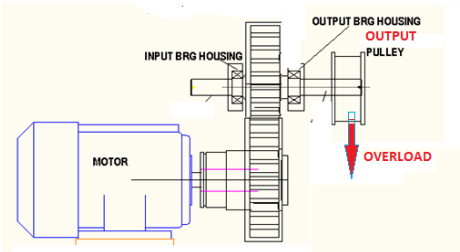

Fig. 1 Machine tool spindle drives use timer belts with timer belt

II. LITERATURE REVIEW

"Transilvania University Brasov, Romania" in the paper titled "Design Procedure of Elastic and Safety Clutches using Cam Mechanisms" states that, topological and structural generation of elastic and safety coupling, In the second part, on the basis of the functional characteristic of the cam gears, we propose a simple method for the structural and generation of elastic and safety couplings[1].

"Nicolae EFTIMIE" in the paper titled "Dynamic Simulation Of The Safety Clutches With Balls" states that, explored the clutches are used largely in machine buildings, and by the correct selection of these depends – to a great extent – the safe and long working, both of these and of the kinematic chain equipped with them[2].

"M Jackel1, J Kloepfer, M Matthias and B Seipel" in the paper titled "The novel MRF-ball-clutch design – a MRF-safety-clutch for high torque applications" states that the development of a safety-clutch by using magneto rheological fluids(MRF) to switch the transmission torque between a motor and a generator in a bus-like vehicle[3].

"Mr..S.Jegadeesan, Asst.Professor, N.Suganthi, M.E (Applied Electronics) V.S.B. Engineering College, karur" in the paper titled "Design of Energy Savings in Metropolitan Railway Substations and Communication Based Train Control" states that, explored the reduction in energy consumption has become a global concern and the EU is committed to reducing its overall emissions to at least 20%[4].

III. DESIGN AND ANALYSIS

- System design as to number of ball-springs for desired torque capacity.
- Design and geometrical derivations of the groove profile in input base flange.
- Design and geometrical derivations of spring plunger profile.
- Selection and geometrical profile of clutch body ball holder.
- Selection and design of torque control using plunger and casing arrangement.
- Selection of solenoid coil for transmission of desired power
- Selection of timer belt drive for open belt drive
- Mechanical design : This includes the design and development of springs selection of suitable drive motor , strength analysis of various components under the given system of forces

- The critical components of assembly input pulley, solenoid mount, Safety ball clutch input shaft, input base flange, plunger, cylindrical body, output shaft etc., components will be designed using conventional theories of failure using various formulae, 3-D models of the above parts will be developed using Unigraphix software and meshing – analysis will be done, the result of stress produced will be validated using ANSYS-Workbench 14.5 release.

Input Data Required For Design
Motor Details,
1. Single Phase AC Motor
2. 230 Volt, 50Hz
3. 0.5 Amps,
4. Power = 0.125Hp
= 93.25 watt
5. Speed = 1500 rpm

A) Torque Calculations

$$\text{Power (P)} = \frac{2\pi NT}{60}$$

$$T = \frac{60 \times P}{2 \times \pi \times N} = \frac{60 \times 93.25}{2 \times \pi \times 1500} = 0.59365 \text{ N m}$$

$$T = 0.59365 \times 10^3 \text{ N-mm}$$

Considering 25% over load

$$\text{Torque Design} = 1.25 \times T = 1.25 \times 0.59365 \times 10^3$$

$$\text{Torque design} = 0.742 \times 10^3 \text{ N-mm}$$

B) Design of Torque Limiter Clutch.

Calculation Of Tangential Force On Balls (Ft)

$$Ft = \frac{2 \times Mt}{D} = \frac{2 \times 0.742 \times 10^3}{D}$$

Assuming pitch circle diameter of the grooves (D) = 90 mm

$$Ft = \frac{2 \times 0.742 \times 103}{90}$$

$$Ft = 16.489 \text{ N}$$

Calculation of Total Spring Force On Balls (Fs)

$$Fs = Ft \left(\frac{\cos\alpha - \mu \sin\alpha}{\sin\alpha + \mu \cos\alpha} - \mu \right)$$

Where,

α = Angle of inclination of groove = 45^0

μ = Coefficient of friction between the balls and body of the clutch

$\mu = 0.08$

$$Fs = 16.489 \left(\frac{\cos 45 - 0.08 \sin 45}{\sin 45 + 0.08 \cos 45} - 0.08 \right)$$

$$Fs = 12.727 \text{ N}$$

Calculation of Force On Each Spring (F)

$$F = \frac{Fs}{Z_b}$$

Where;

Z_b = Number of balls in clutch
= 3 No's

$$F = \frac{12.727}{3}$$

$$F = 4.242 \text{ N}$$

Stiffness of Spring (Ks)

$$Ks = \frac{K_1}{n}$$

Where,

K_1 = Stiffness of spring per turn K_1 (N/mm)
n = Number of turns of spring = 6

Stiffness and permissible static and dynamic loads for helical compression springs

Wire Diameter mm	Outer Diameter mm	Spring Stiffness Per turn K_1 N/mm
1.0	12.0	7.98

$$Ks = \frac{K_1}{n}$$

$$Ks = \frac{7.98}{6}$$

$$Ks = 1.33 \text{ N/mm}$$

Compression of Spring to Exert a Force 'F' (δ_1)

$$\delta_1 = \frac{F}{Ks} = \frac{4.242}{1.33}$$

$$\delta_1 = 3.18947 \text{ mm}$$

Movement of Ball While the Clutch Is Slipping (δ_2)

$$\delta_1 = \frac{d\,(1-\cos\alpha)}{}$$

2

Where,

d = Diameter of ball

= 14 mm

$\delta_2 = \frac{14\,(1-\cos 45)}{2}$

$\delta_2 = 2.050$ mm

Maximum Deflection of Spring (δ_{Max})

$\delta_{max} = \delta_1 + \delta 2$

$= 3.18947 + 2.050$

$\delta_{max} = 5.23947$ mm

Free Length of Spring (L_f)

L_f = Solid length + Maximum deflection + Clearance between adjacent coils

$= n'd + \delta max + (n'-1)$

Where,

$n' = n + 2$

$= 6 + 2$

$n' = 8$

$L_f = 8 \times 1 + 5.23947 + (8-1)$

$L_f = 20.23947$mm

Pitch of Spring Coil (P)

$p = \frac{L_f}{(n-1)} = \frac{20.23947}{(6-1)}$

$p = 4.047$

C) Design of Input Shaft.

TABLE I
MATERIAL SELECTION FOR SHAFT

Designation	**Ultimate tensile strength N/mm^2**	**Yeild strength N/mm^2**
EN 36C	900	700

According to ASME code permissible values of shear stress may be calculated from various relations.

fs Max = 0.18 Sut

$=162$ N/mm^2

fs Max = 0.3 Syt

$=210$ N/mm^2

Calculate Input Torque

$POWER = \frac{2\,\Pi\,NT}{60}$

$T = \frac{60 \times P}{2 \times \Pi \times N}$

$= \frac{60 \times 93.25}{2 \times \Pi \times N}$

Assuming operation speed = 1500 rpm.

$= \frac{60 \times 93.25}{2 \times \Pi \times 1500}$

T = 0.59365 N-m

Assuming 25% overload.

T design = 1.25 x T

$= 1.25 \times 0.59365 \times 10^3$

$= 0.742 \times 10^3$ N-mm.

Check for Torsional Shear Failure of Shaft:

Assuming minimum section diameter on input shaft = 16 mm

d = 16 mm

$Td = \Pi/16 \times fs\ act \times d^3$

$fs\ act = \frac{16 \times Td}{\Pi \times d^3}$

$= \frac{16 \times 0.742 \times 10^3}{\Pi \times (16)^3}$

fs act = 0.9226 N/mm^2

As fs act < fs all

I/P shaft is safe under Torsional load.

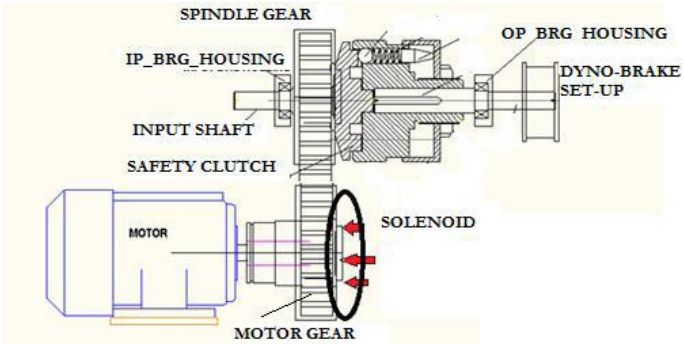

Fig. 2 Experimental Setup

A. Analysis of Component

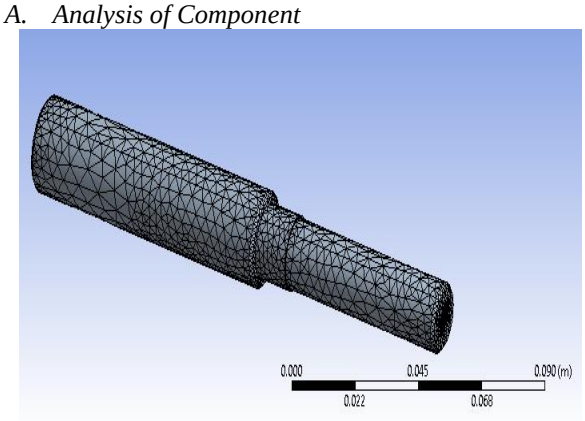

Fig. 3 Modelling and Meshing of shaft

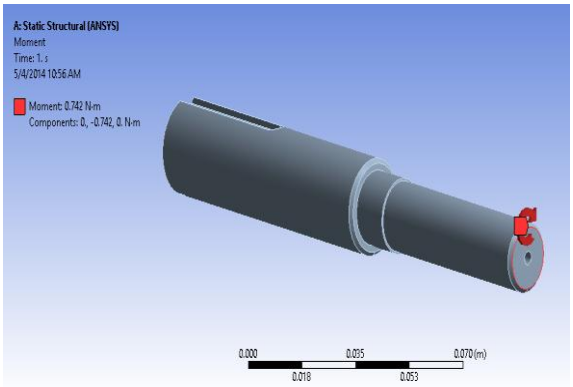

Fig. 4 Boundary Conditions

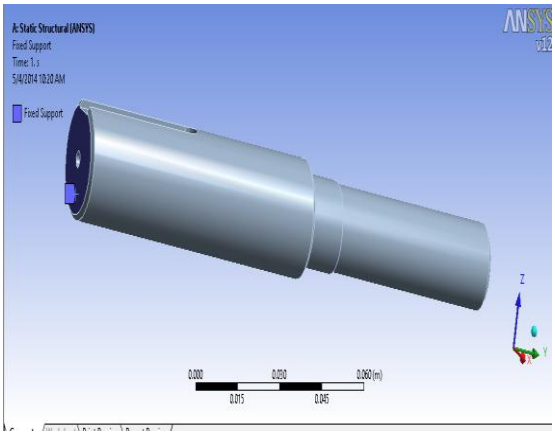

Fig. 5 Boundary Conditions

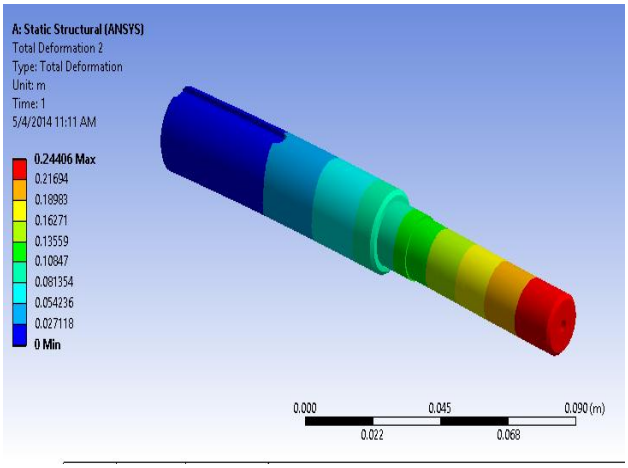

Fig. 6 Result

IV. PHOTOGRAPHS OF FINISHED COMPONENT

All photographs have been captured after its manufacturing as per design.

Fig. 7 Nut

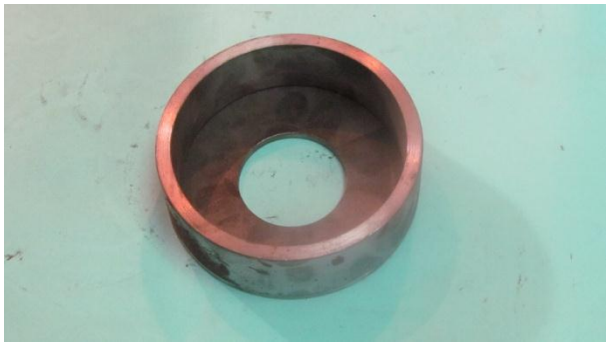

Fig. 8 Casing

Fig. 9 Bearing Housing

Fig. 10 Base Flange

V. EXPERIMENTATION AND RESULT

After conducting experiment on test rig following result obtained.

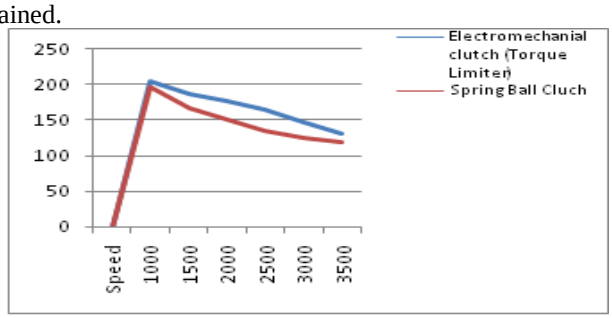

Fig. 11 Torque Vs Speed result for clutch

VI. CONCLUSIONS

The torque value is determined by the force of the springs that are installed in the unit. The spring force acts upon the slides that are part of the inner shaft. These slides transmit force that will hold the drive key into an engagement slot in the outer housing. When the torque load exceeds the rating, (determined by precision tempered torque springs) the Safety ball clutches drive key will pivot out of the engagement slot to disengage the Safety ball clutch. After disengagement the Safety ball clutch does not have significant resistance to rotation. Upon completion of one shaft rotation the safety ball clutch will automatically try to reengage. Once the overload is removed and speed reduced, the drive key will snap into the engagement slot and the Safety ball clutch will be reset for the next overload event .This particular design is suitable for a single set of the design torque, and is not suitable for applications where the set torque may vary as per application .Rarely occurring overloads must be considered during the design process of a power train. These overloads can be evoked by malfunctions in the electronics of inverter and installation control, by

obstructions in the work flow, by mis-operation etc. These overloads may create pre-damages which lead to full failure of the assembly or its components. Such affecting loads are avoidable by means of overload clutches

ACKNOWLEDGMENT

Thanks to Prof. S. V. Patil for his valuable contribution in developing the IJRSD article template.

REFERENCES

[1] S. M. Metev and V. P. Veiko, Laser Assisted Microtechnology, 2nd ed., R. M. Osgood, Jr., Ed. Berlin, Germany: Springer-Verlag, 1998.

[2] J. Breckling, Ed., The Analysis of Directional Time Series: Applications to Wind Speed and Direction, ser. Lecture Notes in Statistics. Berlin, Germany: Springer, 1989, vol. 61.

[3] S. Zhang, C. Zhu, J. K. O. Sin, and P. K. T. Mok, "A novel ultrathin elevated channel low-temperature poly-Si TFT," IEEE Electron Device Lett., vol. 20, pp. 569–571, Nov. 1999.

[4] M. Wegmuller, J. P. von der Weid, P. Oberson, and N. Gisin, "High resolution fiber distributed measurements with coherent OFDR," in Proc. ECOC'00, 2000, paper 11.3.4, p. 109.

[5] R. E. Sorace, V. S. Reinhardt, and S. A. Vaughn, "High-speed digital-to-RF converter," U.S. Patent 5 668 842, Sept. 16, 1997.

[6] (2002) The IEEE website. [Online]. Available: http://www.ieee.org/

[7] M. Shell. (2002) IEEEtran homepage on CTAN. [Online]. Available: http://www.ctan.org/tex-archive/macros/latex/contrib/supported/IEEEtran/

[8] FLEXChip Signal Processor (MC68175/D), Motorola, 1996.

[9] "PDCA12-70 data sheet," Opto Speed SA, Mezzovico, Switzerland.

[10] A. Karnik, "Performance of TCP congestion control with rate feedback: TCP/ABR and rate adaptive TCP/IP," M. Eng. thesis, Indian Institute of Science, Bangalore, India, Jan. 1999.

[11] J. Padhye, V. Firoiu, and D. Towsley, "A stochastic model of TCP Reno congestion avoidance and control," Univ. of Massachusetts, Amherst, MA, CMPSCI Tech. Rep. 99-02, 1999.

[12] Wireless LAN Medium Access Control (MAC) and Physical Layer (PHY) Specification, IEEE Std. 802.11, 1997.

